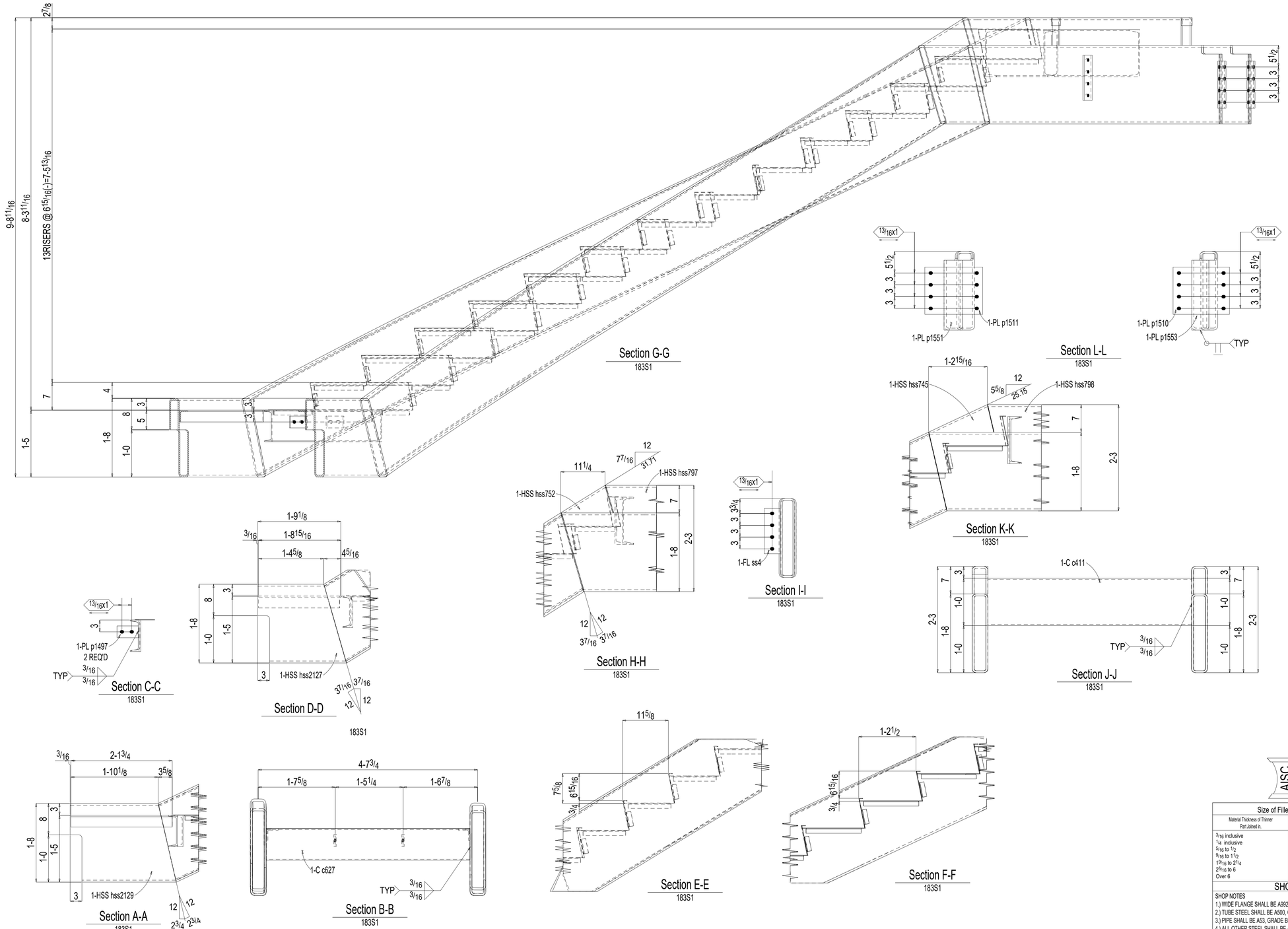

BILL OF MATERIAL

PC MARK	QTY TOTAL	DESCRIPTION	LENGTH		MINOR MARK	STEEL GRADE	REMARKS

Total weight : 0

AISC CERTIFIED FABRICATOR

Size of Fillet Welds Chart

Material Thickness of Thinner Part Joined in.	Minimum Size of Fillet Weld in.
3/16 inclusive	3/16
1/4 inclusive	3/16
5/16 to 1/2	1/4
9/16 to 11/2	5/16
15/16 to 2 1/4	3/8
2 5/16 to 6	1/2
Over 6	5/8

SHOP NOTES

SHOP NOTES
1.) WIDE FLANGE SHALL BE A992, GRADE 50
2.) TUBE STEEL SHALL BE A500, GRADE B
3.) PIPE SHALL BE A53, GRADE B
4.) ALL OTHER STEEL SHALL BE ASTM A36 UNO
5.) ALL HOLES TO BE 13/16" (U.N.O.)
6.) APPLY 1.5 DRY MILS RED OXIDE PRIME (UNO)
7.) ALL WELDS, SEE FILLET WELD CHART UNO
8.) ALL CONT. MAT'L WELDS REFER CHART ABOVE FILLET 2 ON 12 UNO

ERECTOR NOTE: (CORRECTION OF ERRORS)
ACE FABRICTORS IS NOT RESPONSIBLE FOR CORRECTION OF MINOR MISFITS BY REAMING, CHIPPING, OR CUTTING. ERRORS WHICH CANNOT BE CORRECTED BY THE FOREGOING MEANS ARE TO BE REPORTED IMMEDIATELY TO ACE BY THE ERECTOR PER: AISC 15TH EDITION PG. 16.3-57 PARA. 7.14

DATE: 04-07-25	FOR APPROVAL
DATE:	FOR CONSTRUCTION

No.	Date	Description
A	04-07-25	FOR APPROVAL

ACE FABRICATORS, INC.
Office:7002A Furay Rd~Houston, Tx 77016
Shop1: 7010 Furay Rd~Houston, Tx 77016
Shop2: 7002 Furay Rd~Houston, Tx 77016
Phone:281-442-0992 Fax:281-442-0994

CUSTOMER: GAMMA CONSTRUCTION CO.	DETAILER: KAS	DATE: 04-07-25
PROJECT: KELSEY SEYBOLD - TOWNE LAKE	CHECKER: VRP	DATE: 04-07-25
LOCATION: 9831 TOWNE LAKE PKWY - CYPRESS TX 77433		
ARCHITECT: KIRKSEY ARCHITECTURE	JOB NO.: 3631.25	SHT NO.: **183A**
ENGINEER: IMEG CORP		
REF. E110 THRU E160	DESCRIPTION STAIR DETAIL	