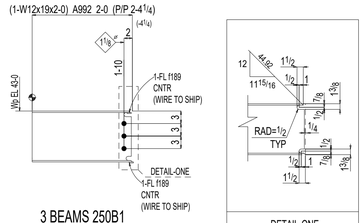

3 BEAMS 250B1

W	12 3/16x1/4	FIELD BOLTS:
F	4x3/8	3-1Diax2 A325SC
K	7/8x5/8	

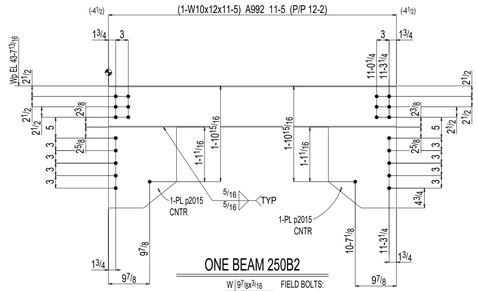

ONE BEAM 250B2

W	9 7/8x3/16	FIELD BOLTS:
F	3 15/16x3/16	12-3/4Diax1 3/4 A325N
K	3/4x5/8	10-3/4Diax2 1/4 A325N

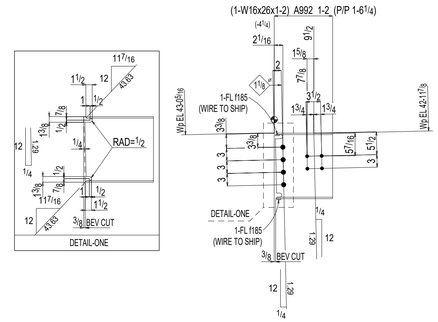

ONE BEAM 250B3

W	15 11/16x1/4	FIELD BOLTS:
F	5 1/2x3/8	4-1Diax2 A325SC
K	11/16x13/16	

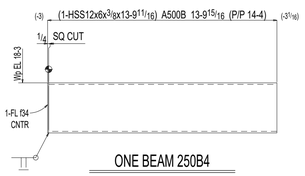

ONE BEAM 250B4

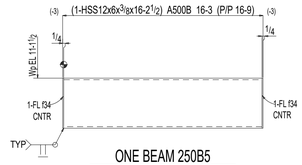

ONE BEAM 250B5

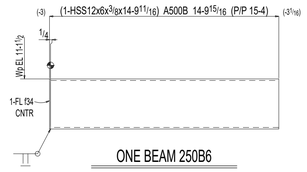

ONE BEAM 250B6

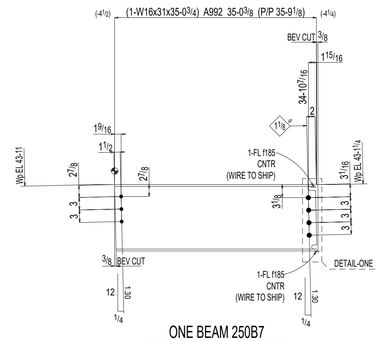

ONE BEAM 250B7

W	15 7/8x1/4	FIELD BOLTS:
F	5 1/2x7/16	4-1Diax2 A325SC
K	11/8x13/16	3-3/4Diax1 3/4 A325N

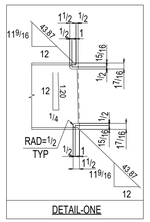

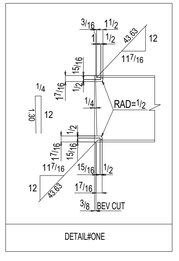

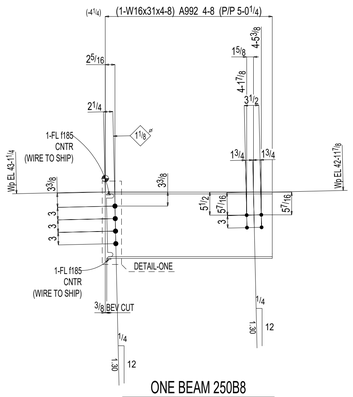

ONE BEAM 250B8

W	15 7/8x1/4	FIELD BOLTS:
F	5 1/2x7/16	4-1Diax2 A325SC
K	11/8x13/16	

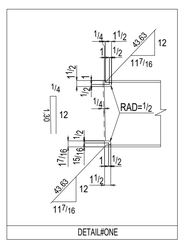

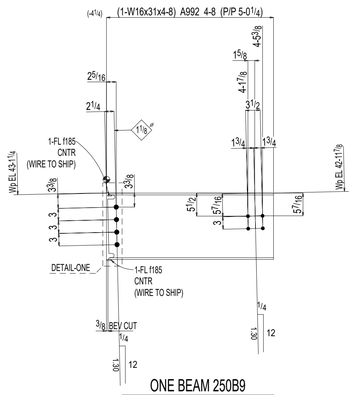

ONE BEAM 250B9

W	15 7/8x1/4	FIELD BOLTS:
F	5 1/2x7/16	4-1Diax2 A325SC
K	11/8x13/16	

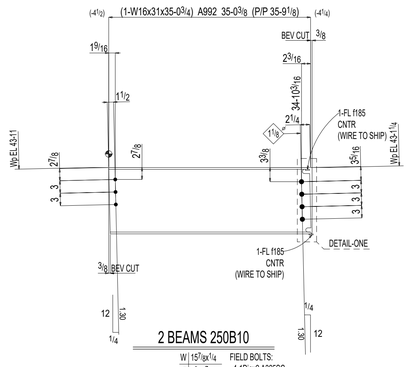

2 BEAMS 250B10

W	15 7/8x1/4	FIELD BOLTS:
F	5 1/2x7/16	4-1Diax2 A325SC
K	11/8x13/16	3-3/4Diax1 3/4 A325N

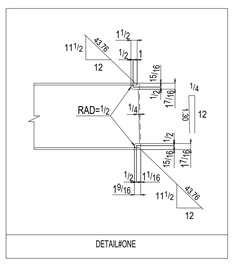

BILL OF MATERIAL

PC MARK	QTY TOTAL	DESCRIPTION	LENGTH		MINOR MARK	STEEL GRADE	REMARKS
250B1	3	BEAM					
	3	W12x19	2	0	250B1	A992	
	6	FL 1/2x1	0	5	f189	A36	WIRE TO SHIP
		FIELD BOLTS					
	9	1 Dia A325SC	0	2			+1HD WASH
250B2	ONE	BEAM					
	1	W10x12	11	5	250B2	A992	
	2	PL 7/16x16 5/16	1	7 3/8	p2015	A36	
		FIELD BOLTS					
	10	3/4 Dia A325N	0	2 1/4			+1HD WASH
	12	3/4 Dia A325N	0	1 3/4			+1HD WASH
250B3	ONE	BEAM					
	1	W16x26	1	2	250B3	A992	B1E
	2	FL 1/2x1	0	6 1/2	f185	A36	WIRE TO SHIP
		FIELD BOLTS					
	4	1 Dia A325SC	0	2			+1HD WASH
250B4	ONE	BEAM					
	1	HSS12x6x3/8	13	9 11/16	250B4	A500B	
	1	FL 1/2x6	1	0	f34	A36	
250B5	ONE	BEAM					
	1	HSS12x6x3/8	16	2 1/2	250B5	A500B	
	2	FL 1/2x6	1	0	f34	A36	
250B6	ONE	BEAM					
	1	HSS12x6x3/8	14	9 11/16	250B6	A500B	
	1	FL 1/2x6	1	0	f34	A36	
250B7	ONE	BEAM					
	1	W16x31	35	0 3/4	250B7	A992	B2E
	2	FL 1/2x1	0	6 1/2	f185	A36	WIRE TO SHIP
		FIELD BOLTS					
	4	1 Dia A325SC	0	2			+1HD WASH
	3	3/4 Dia A325N	0	1 3/4			+1HD WASH
250B8	ONE	BEAM					
	1	W16x31	4	8	250B8	A992	B1E
	2	FL 1/2x1	0	6 1/2	f185	A36	WIRE TO SHIP
		FIELD BOLTS					
	4	1 Dia A325SC	0	2			+1HD WASH
250B9	ONE	BEAM					
	1	W16x31	4	8	250B9	A992	B1E
	2	FL 1/2x1	0	6 1/2	f185	A36	WIRE TO SHIP
		FIELD BOLTS					
	4	1 Dia A325SC	0	2			+1HD WASH
250B10	2	BEAM					
	2	W16x31	35	0 3/4	250B10	A992	B2E
	4	FL 1/2x1	0	6 1/2	f185	A36	WIRE TO SHIP
		FIELD BOLTS					
	8	1 Dia A325SC	0	2			+1HD WASH
	6	3/4 Dia A325N	0	1 3/4			+1HD WASH
							Total weight : 5867