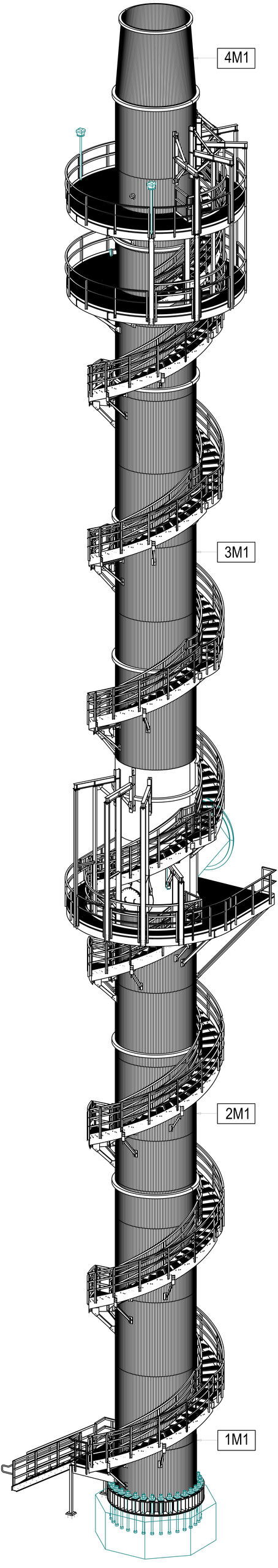
4M1
3M1
2M1
1M1

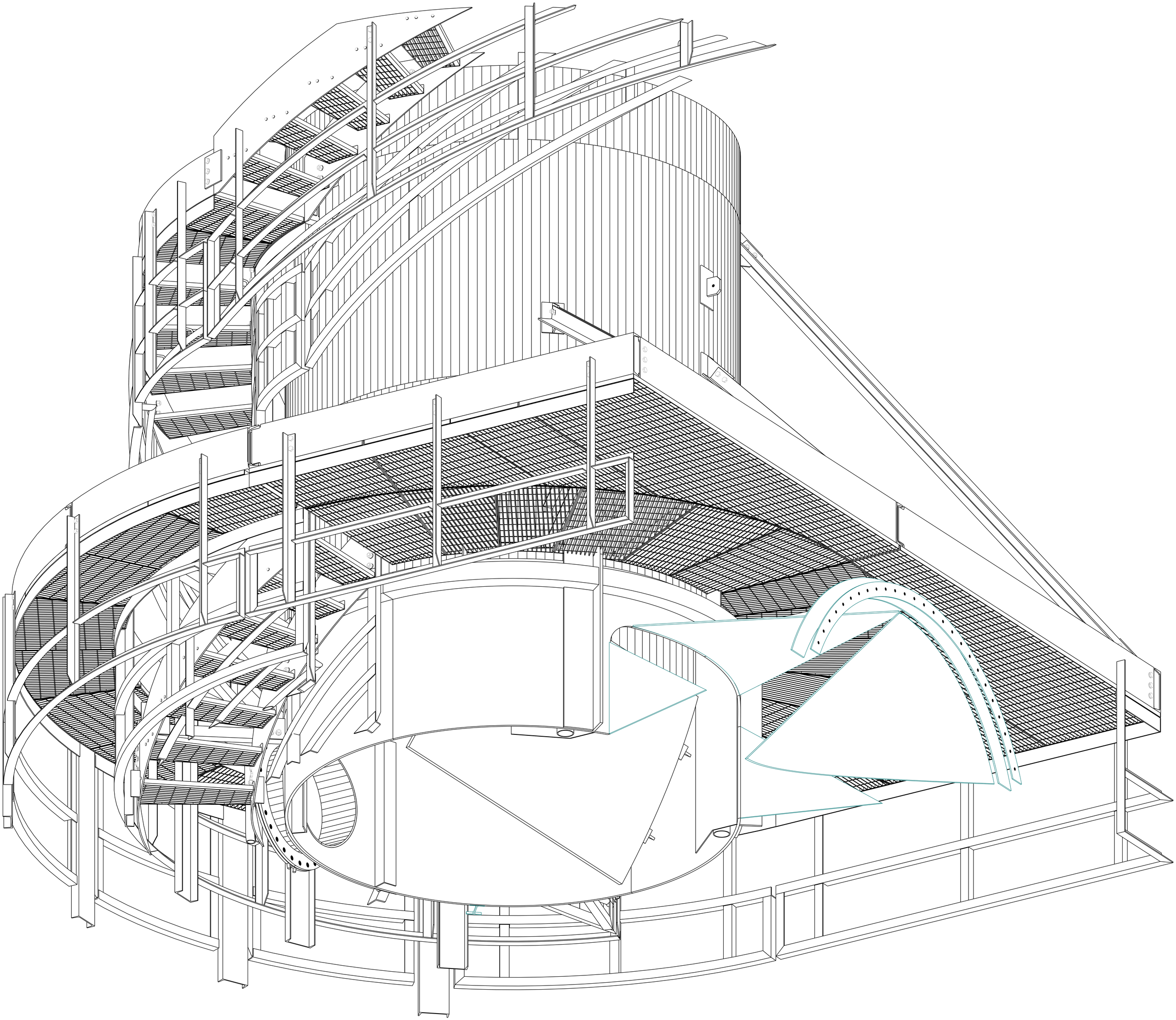

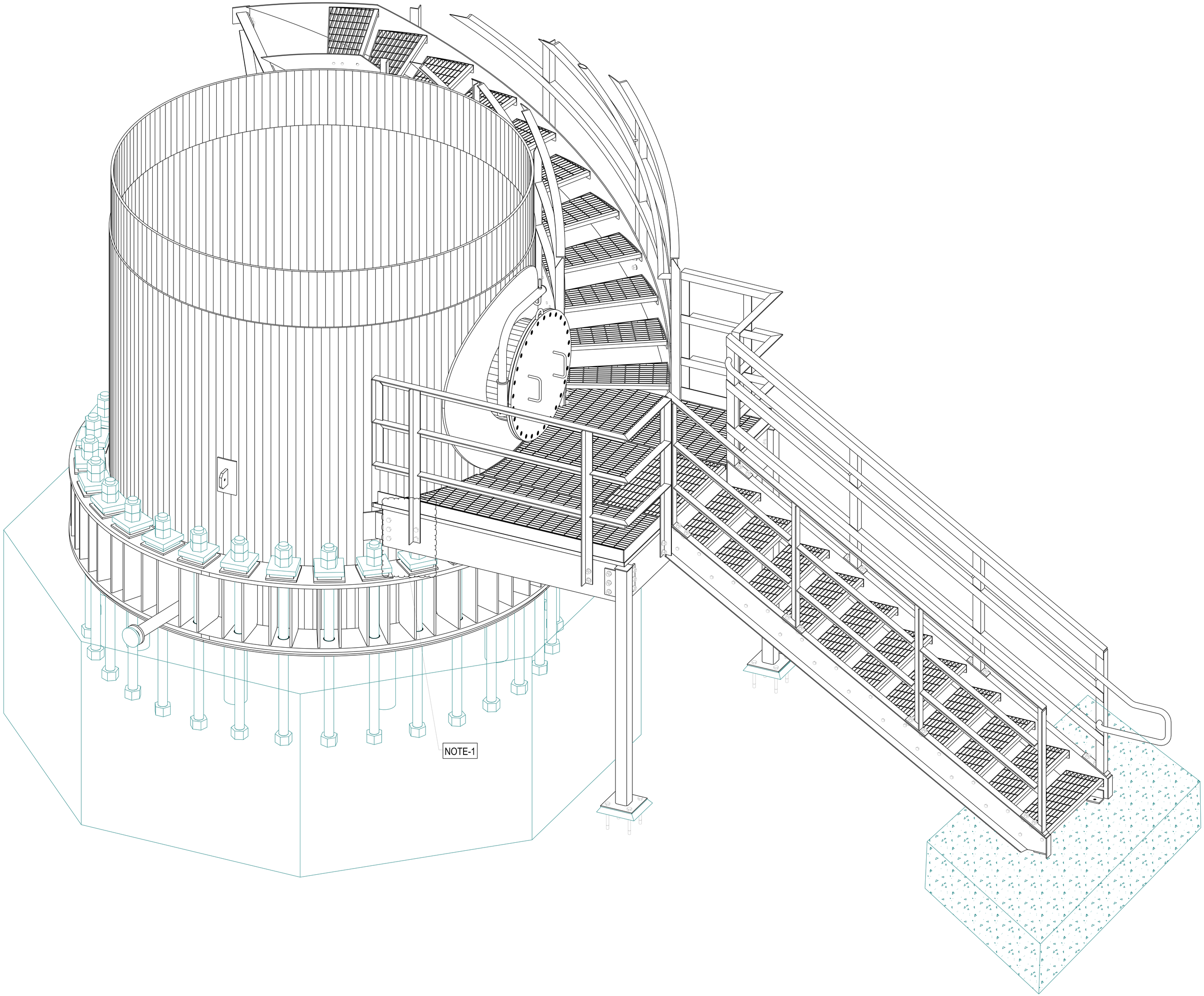
NOTE-1

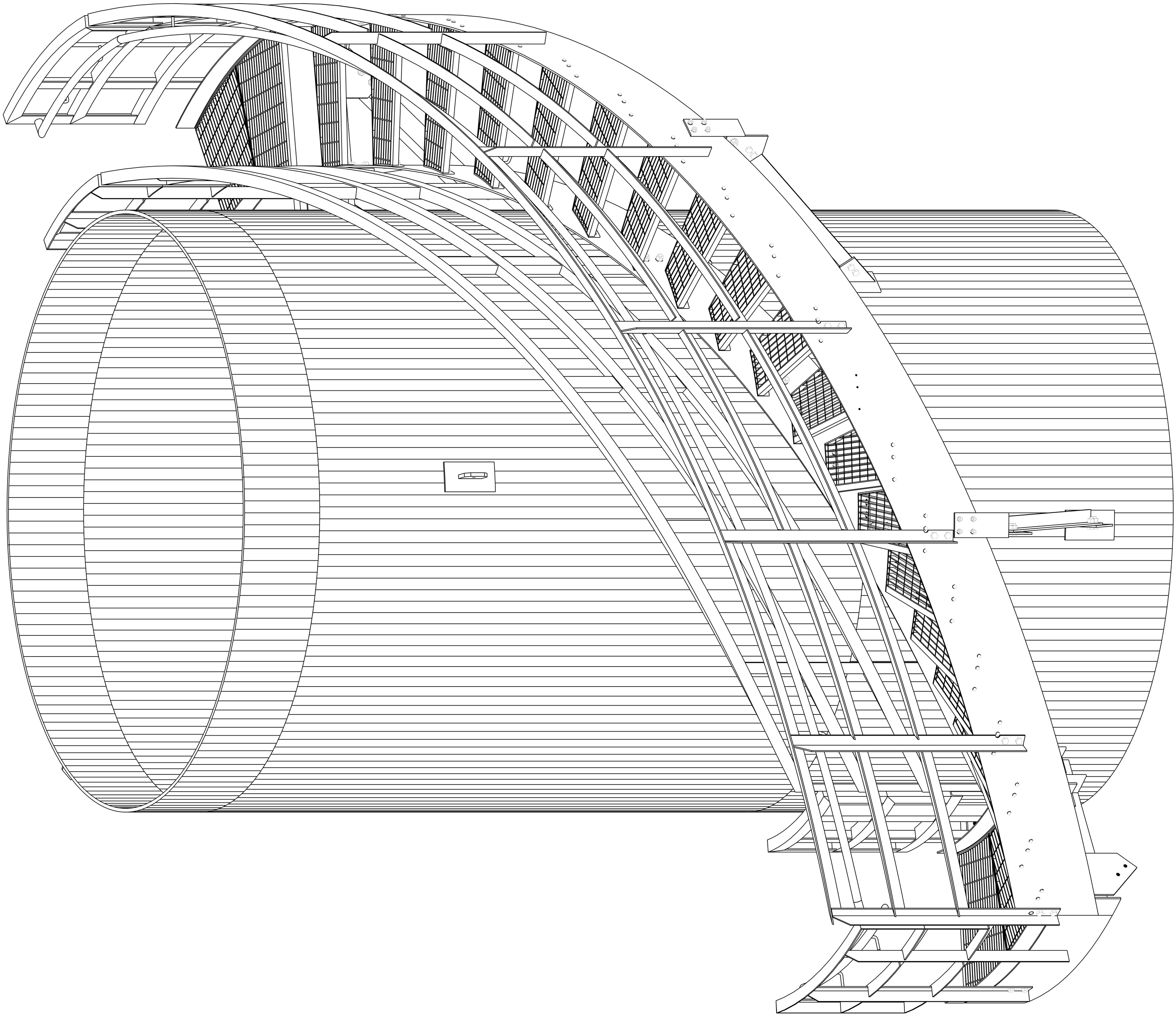

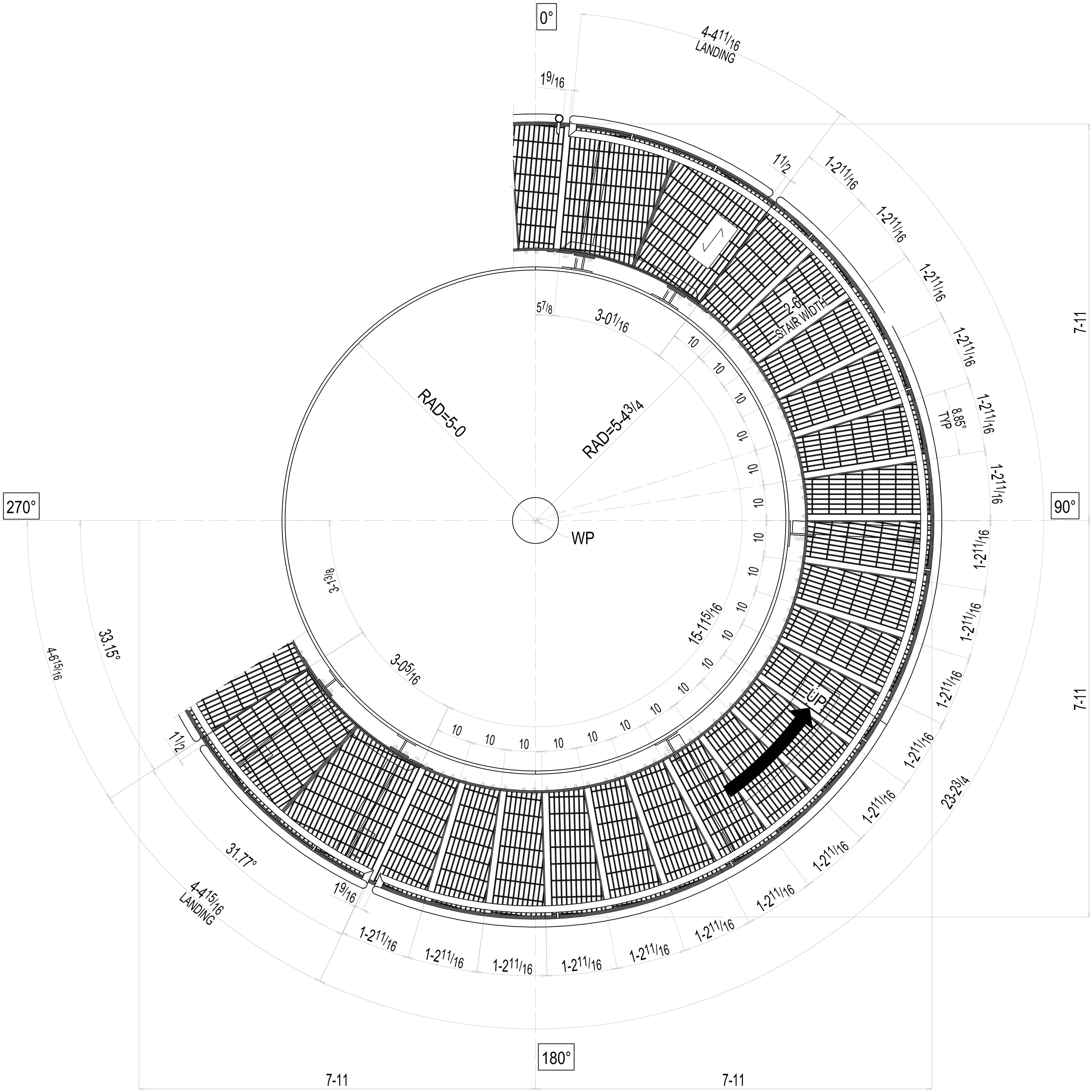

STAIR PLAN

NOTES:

1) TOP OF LANDING SEE PLAN.
2) ⟷ - INDICATES SPAN DIRECTION.

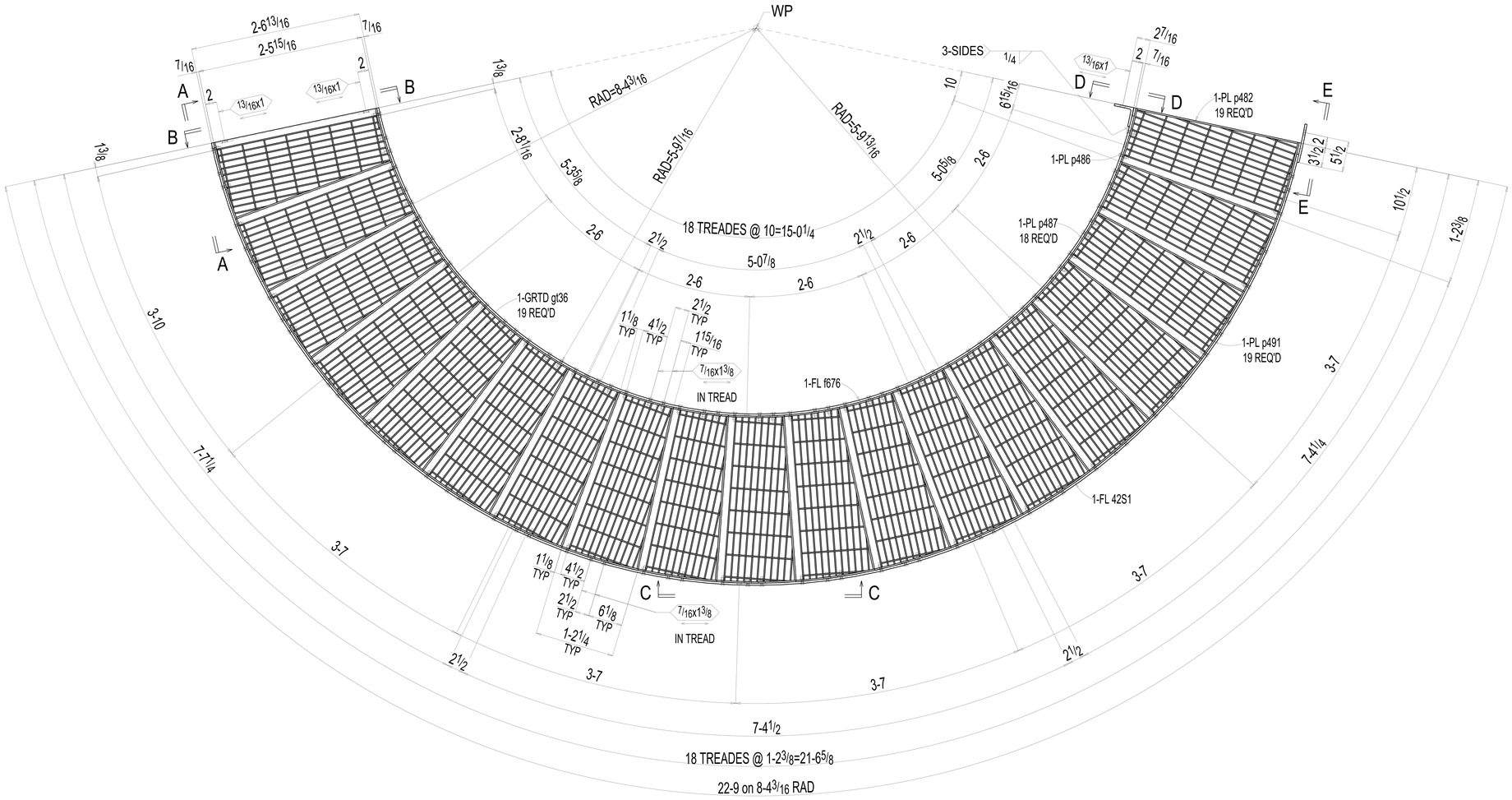

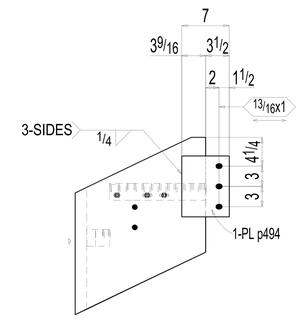

Section E-E
42S1

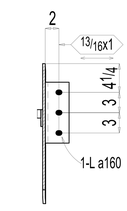

Section D-D
42S1

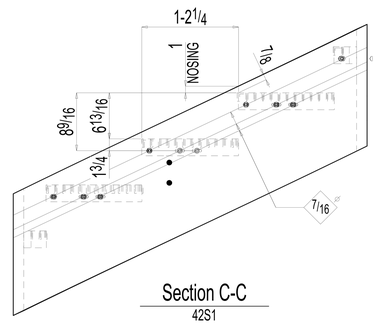

Section C-C
42S1

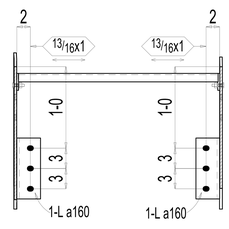

Section B-B
42S1

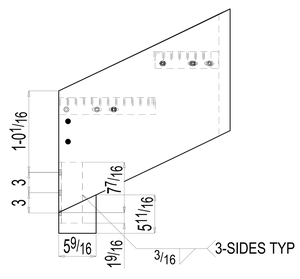

Section A-A
42S1

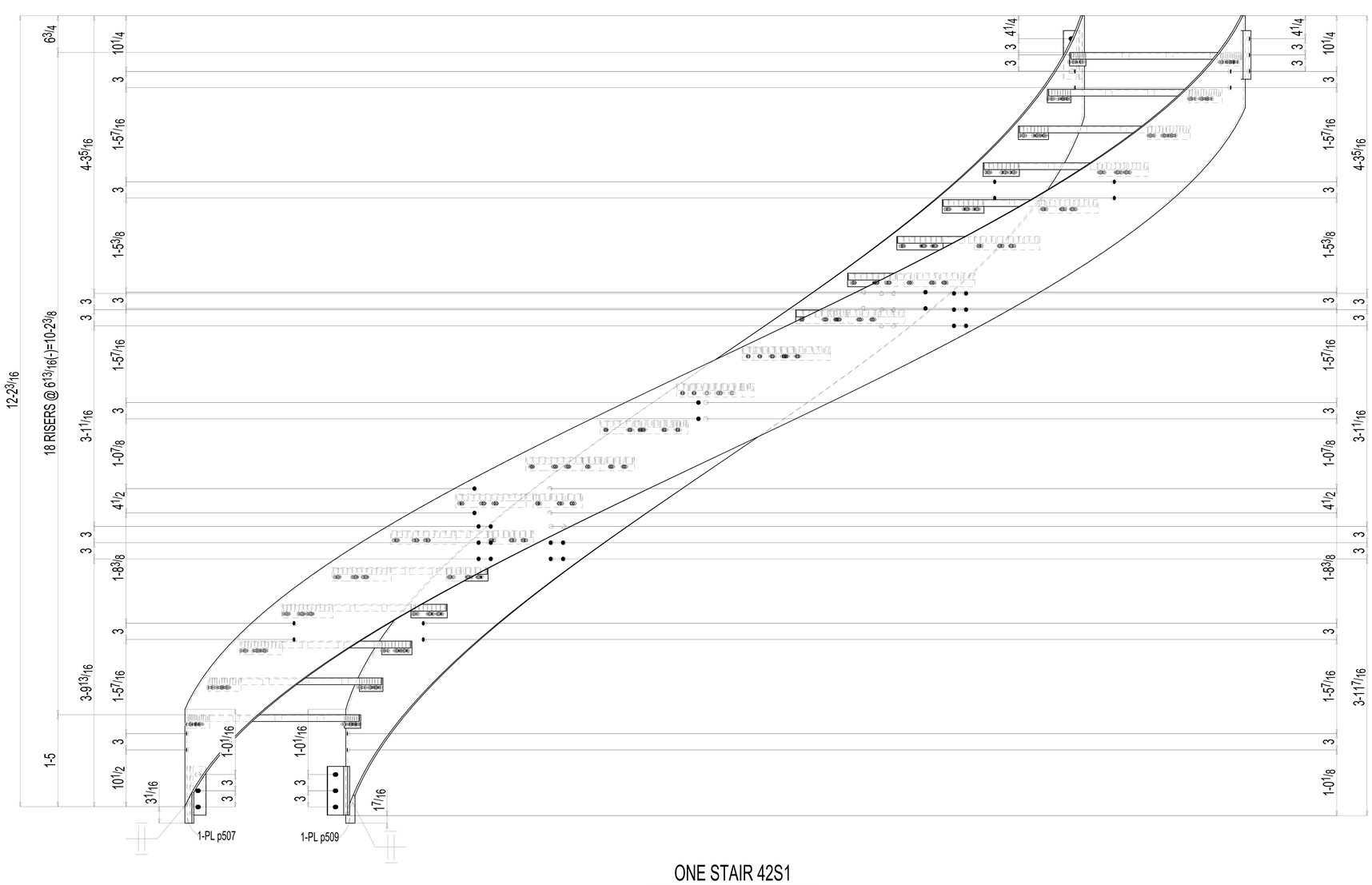

ONE STAIR 42S1

SHOP BOLTS:
113-3/8Diax1 1/2 A325
FIELD BOLTS:
24-3/4Diax2 A325
10-3/4Diax1 3/4 A325
3-3/4Diax2 1/4 A325